Item	Number	Title	Qty	Opposite hand
1	B0000027	Ball Bearing 30 I/D 62 O/D 16 Long + seals	3	
2	B0000048	Taperlock Set SPZ 80-2 1210-24	1	
3	B0000060	Double Row Angular Contact Bearing 3206B	1	
4	D0004026	Bearing Housing	1	
5	D0004027	Saw Spindle	1	
6	D0004030	Lock Ring	1	
7	D0004031	Saw Washer	1	
8	D0004271	Front Saw Flange	1	
9	D0004272	Back Saw Flange	1	
10	D0004771	Inner Bearing Spacer	1	
11	D0004772	Outer Bearing Spacer	1	
12	D0004852	Key for D4027	1	
13	F0000015	Screw M6 x 25 Cap Socket	1	
14	F0000107	Bolt M16x1.5 x 45 Hex BZP	1	
15	F0000153	Screw M6 x 10 C/sink Socket	2	

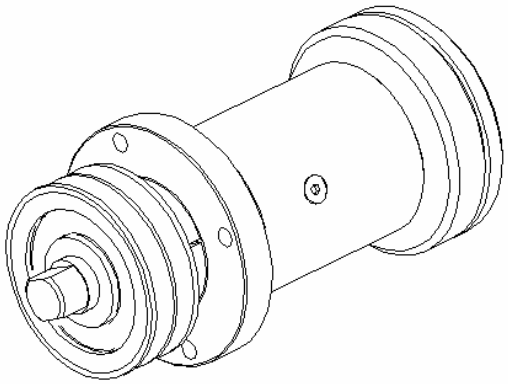

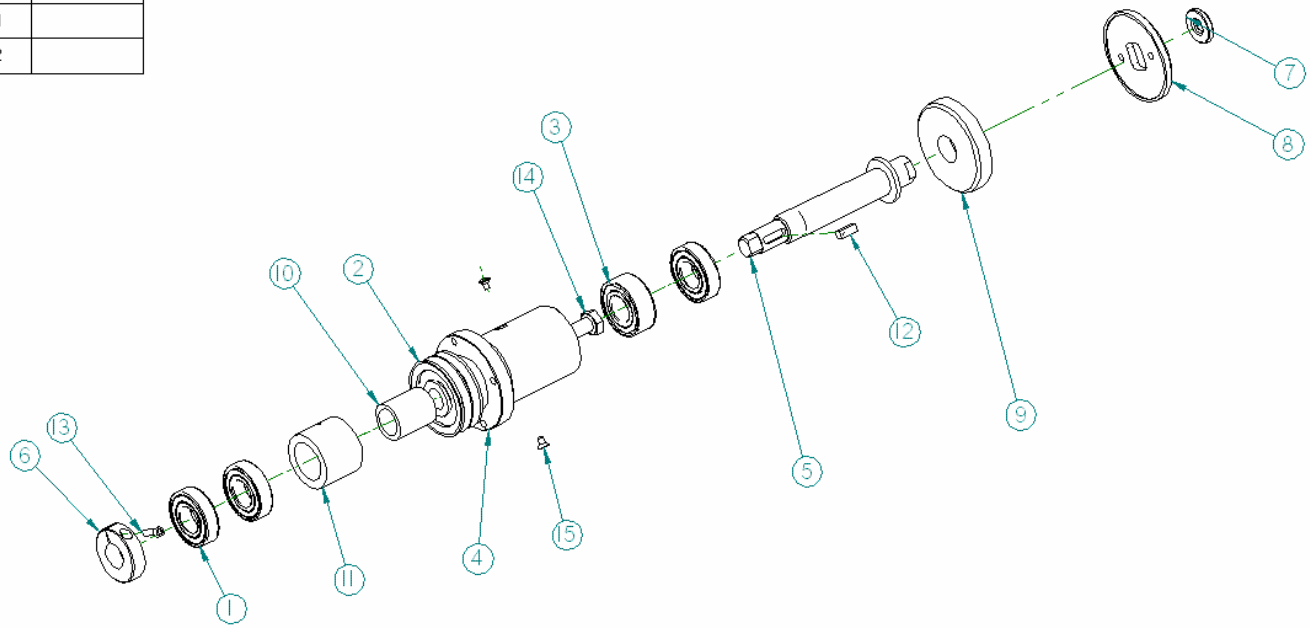

Issue	Date	By	Description of Change	ECR No.
1	2/10/06	NLC	Original	-

Stuga
CNC MACHINING SYSTEMS
Thomas Engineering
8 Grinell Way
Harfeys Industrial Estate
Great Yarmouth, NR31 0LU
Tel: 01493 650107
Fax: 01493 415605
Web: www.stuga.co.uk

© This drawing and the information thereon is the property of Thomas Engineering. Drawings may not be used, lent or copied without the prior consent of Thomas Engineering and must be returned on demand.

1. Tapped Holes, Use 80 Coarse (Unless Stated)
2. Tolerances, Decimal Places 0=±1mm, 0.0=±0.1mm, 0.00=±0.05mm
3. Remove All Burrs and Sharp Edges
4. If In Doubt Ask

Material
Opp. Hand -
Finish -
Stock R0000560

Drawing Title: **Bench Assemble Spindle**

Scale: n/a

Drawn NLC | Date 02/10/2006 | Chkd GJS | Date 02/10/2006 | Sheet 1 of 1

A3

Drawing No **R0000560** | Iss 1